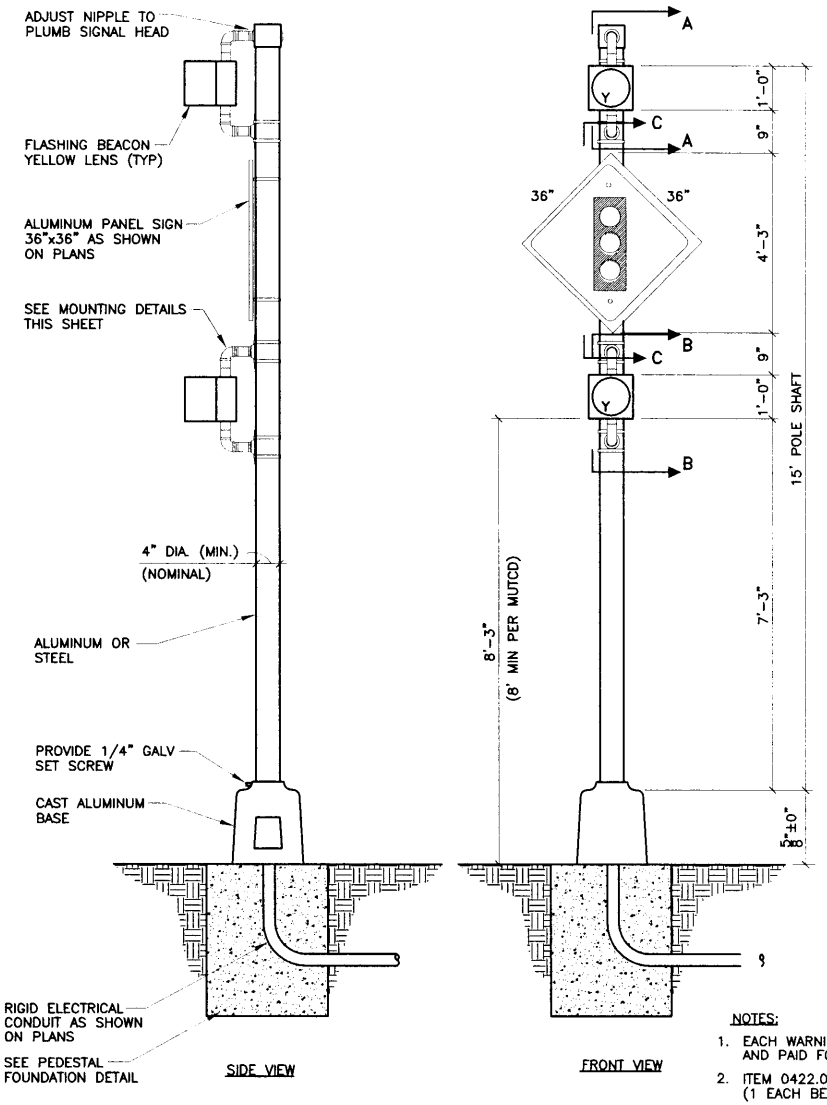

HAZARD IDENTIFICATION BEACON DETAIL

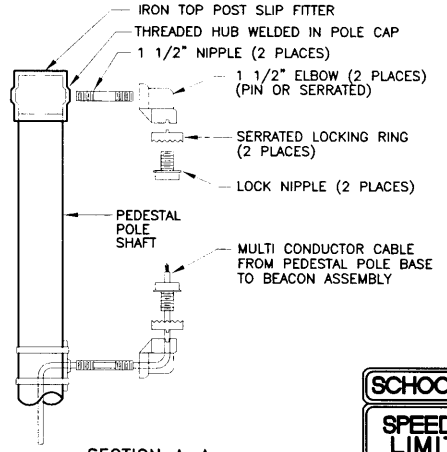

SECTION A-A

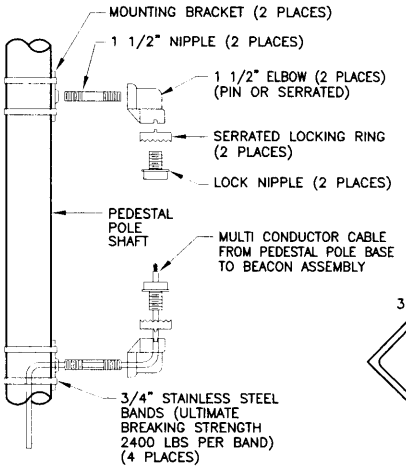

SECTION B-B

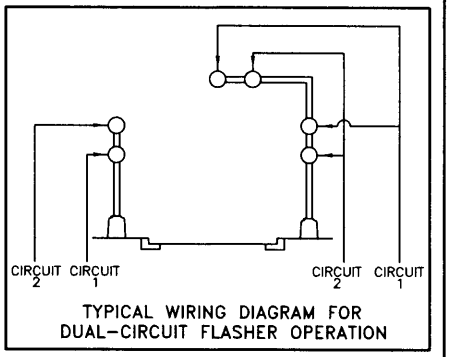

TYPICAL WIRING DIAGRAM FOR DUAL-CIRCUIT FLASHER OPERATION

S5-1 (VERTICAL)

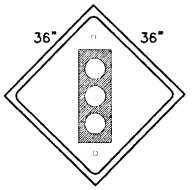

W3-3-36

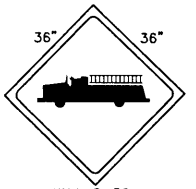

W11-8-36

TYPICAL SIGN FACE DETAIL FOR HAZARD IDENTIFICATION BEACON

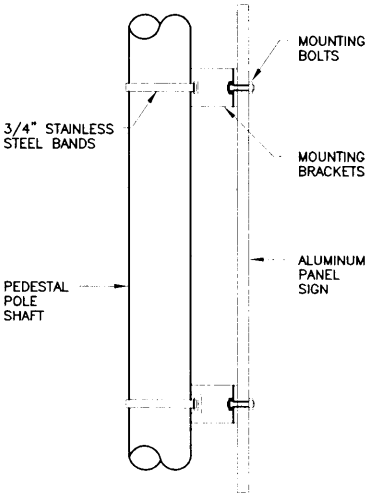

SIGN MOUNT DETAIL

SECTION C-C

NOTES:

1. EACH WARNING TRAFFIC BEACON WILL BE MEASURED AND PAID FOR UNDER THE FOLLOWING ITEMS:
2. ITEM 0422.004 – TRAFFIC SIGNAL PEDESTAL POLE 15' (1 EACH BEACON)
3. ITEM 0423.001 – TRAFFIC SIGNAL FOUNDATION FOR PEDESTAL POLE (1 EACH BEACON)
4. ITEM 0427.001 – 1 SECTION TRAFFIC SIGNAL ASSEMBLY (2 EACH BEACON)
5. ITEM 0450.001 – ALUMINUM PANEL SIGNS (1 EACH BEACON)

COLORS

LEGEND: BLACK(NON-REFLECTIVE)
TOP PANEL: YELLOW
BOTTOM PANEL: WHITE
OUTSIDE BORDER: WHITE
INSIDE BORDER: BLACK

REVISIONS	NM APWA
	TRAFFIC TRAFFIC SIGNAL WARNING TRAFFIC BEACON DETAILS
	DWG. 2566b FEB. 2006